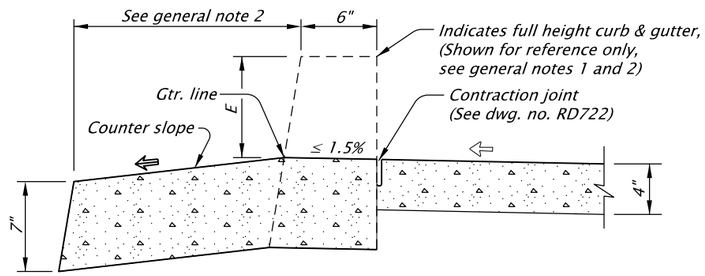

For curb ramps with the counter slope directed away from the gutter.

CURB RUNNING SLOPE ≤ 2%

OPTION "A"

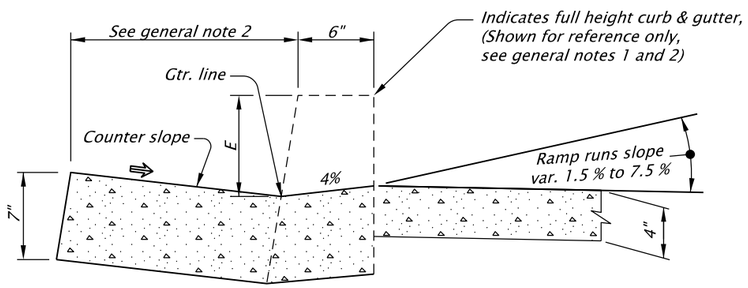

For curb ramps with the counter slope directed towards the gutter.

CURB RUNNING SLOPE = 4%

OPTION "B"

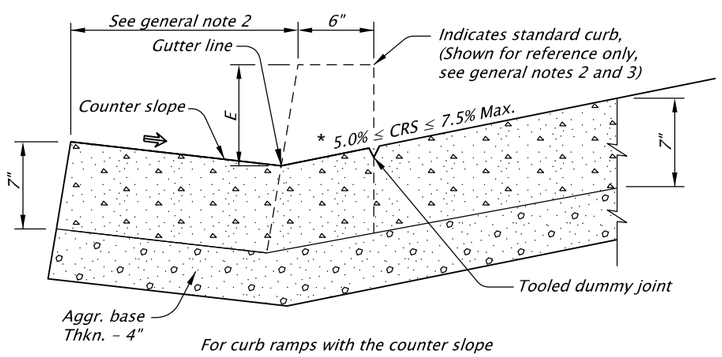

For curb ramps with the counter slope directed towards the gutter and CRS ≥ 5%
** Monolithic curb const. reqd.*
Ramp run slope must equal curb running slope.

CURB RUNNING SLOPE ≥ 5%

OPTION "C"

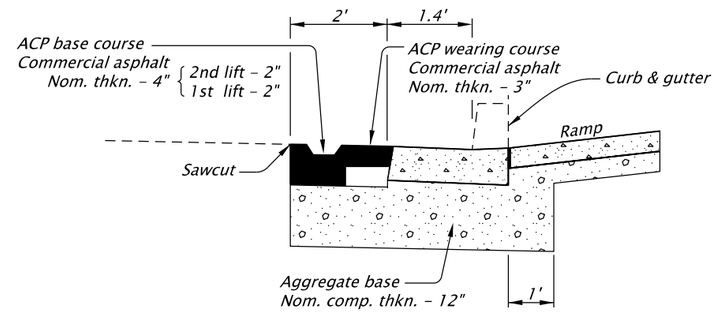

PAVEMENT REPLACEMENT AT CURB RAMPS

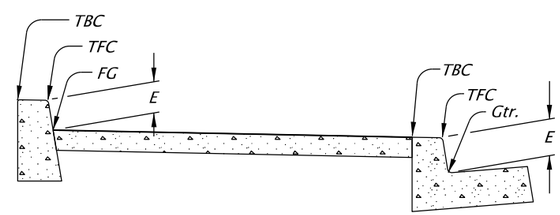

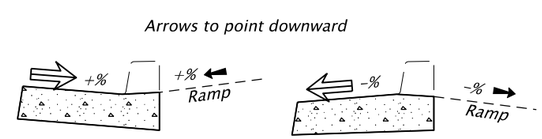

SLOPE DIRECTION

LEGEND

XX+XX.XX, xx.xx, FG xxx.xx E=X"	Station, offset, elevation, curb exposure point
R#	Ramp number
	Softscape

GENERAL NOTES

1. *See dwg. no. RD700, and project plans, for additional curb details.*
2. *Width to match adjacent gutter pan, if present.*
3. *For profile and cross slope, see project plans.*
4. *Curb exposure E = 3" to 9". Vary as shown on project plans, or as directed.*
5. *For curb ramp legend (See dwg. nos. RD900 & RD901)*
6. *Curb Running slope to transition between E= 0 and E = Full height curb (3" to 9"). (Example transition from E = 0 & CRS = 4% to E = 7" CRS = 1.5%)*

REGISTERED PROFESSIONAL ENGINEER
86981PE
OREGON
July 10, 2018
JAMES DALE DARNELL JR.
RENEWS: 12-31-2027

FINAL ELECTRONIC DOCUMENT
AVAILABLE UPON REQUEST

OREGON DEPARTMENT OF TRANSPORTATION

OR99E: NEAR BASILIO DR. (HUBBARD) PROJECT
PACIFIC HIGHWAY EAST
MARION COUNTY

Designer: James Darnell Jr.	Reviewer: Derryl James
CADD Tech: Jeff Larson	Checker: N/A

CURB RAMP DETAILS

SHEET NO.
BB01